THE INFORMATION CONTAINED IN THIS DRAWING IS THE SOLE PROPERTY OF NEUROLOGIC SYSTEMS ANY REPRODUCTION IN PART OR WHOLE WITHOUT THE WRITTEN PERMISSION OF NEUROLOGIC SYSTEMS IS PROHIBITED.

REVISIONS

REV	DESCRIPTION	DATE	APPROVED
	INITIAL RELEASE	XX/XX/XX	XXXX

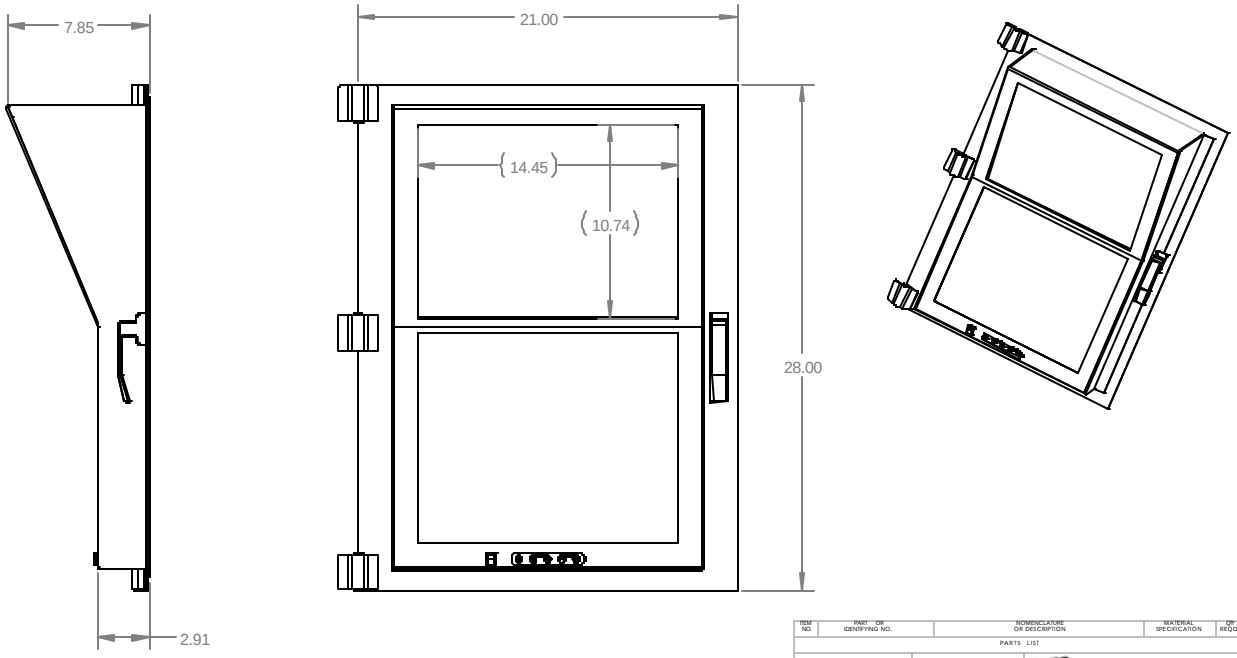

ITEM NO.	PART OR IDENTIFYING NO.	NOMENCLATURE OR DESCRIPTION	MATERIAL SPECIFICATION	QY REQD

PARTS LIST

UNLESS OTHERWISE SPECIFIED DIMENSIONS ARE IN INCHES
TOLERANCES ARE:
FRACTIONS ± DECIMALS .XX± .XXX± ANGLES ± 1

MATERIAL
FINISH

CAD GENERATED DRAWING. DO NOT MANUALLY UPDATE

APPROVALS	DATE
DRAWN MIKE TREJO	08/10/01
CHECKED	
RESP ENG	
MFG ENG	
QUAL ENG	

Neuro Logic Systems
Interactive Touch and Display Systems

GAT
MD-18-1

SIZE | DWG. NO. MD-18-1 | REV
SCALE | CAD FILE MD-18-1 | SHEET OF

NEXT ASSY	USED ON
XXX-XX-XXXX	XXX-XX-XXXX

APPLICATION

DO NOT SCALE DRAWING